XL-IRM0038C-38XY-C 贴片红外接收头 技术数据表 Technical Data Sheet

简介：



模型图仅供参考

该产品内含高速高灵敏度PIN光电二极管和低功耗、高增益前置放大IC,采用环氧树脂塑封半圆球型封装及内、外双重屏蔽抗干扰设计，该产品已经通过 REACH 和 ROHS 认证属于环保产品，在红外遥控系统中作为接收器使用。

This product contains a high-speed and high sensitivity pin photo diode and Low power consumption, high gain Preamplifier Ic Adopting epoxy resin plastic encapsulated semi circular spherical packaging Dual shielding and anti-interference design for both inside and outside,This product has been certified by Reach and Rohs as an environmentally friendly product, Used as a receiver in infrared remote control systems

特点（characteristic）：

* 小体积环氧树脂塑封贴片式封装；
Small volume epoxy resin plastic sealing patch packaging
* 外观尺寸（长*宽*高）：5.1*4.8*4.1mm
Appearance dimension（length * width * height）：5.1*4.8*4.1mm.
* 宽工作电压，2.7-5.5V；
Wide working voltage, 2.7-5.5V；
* 低功耗；宽角度及长距离接收；
Low power consumption; Wide angle and long-distance reception ;
* 能抵挡环境干挠；
withstand environmental interference
* 输出匹配 TTL、CMOS 电平，低电平有效；
Output matching TTL, CMOS level, low level effective

应用领域（product application）：

* 家用电器（空调、风扇、暖风机、加湿器）；
Household appliances (air conditioning, fans, heaters, humidifiers)
* 多媒体视听设备（电视、DVD、机顶盒、车载移动DVD、硬盘播放器）；
Multimedia audiovisual equipment (TV, DVD, set-top box, car mounted mobile DVD, hard drive player
* 电脑及周边设备，感应洁具；
Computers and peripheral equipment, induction sanitary ware
* 工业控制（仪表，工业自动化）；
Industrial Control (Instrumentation, Industrial Automation
* 遥控玩具，通讯器材，照相器材，事务机器，
Remote control toys, communication equipment, photography equipment, office machines;
* 金融电子，汽车电子，灯饰照明；
Financial Electronics, Automotive Electronics, Lighting






目录
Catalogue

电性参数
Electrical Characteristics.....3

可靠性实验
Reliability Test Items And Conditions.....7

外形尺寸
Outline Dimensions.....10

包装
Packaging.....11

使用注意事项
Precautions.....12

电性参数

Electrical Characteristics

极限参数（Absolute Maximum Ratings）（Ta=25℃）

参数名称 Parameter	符号 Symbol	数值 Rating	单位 Unit
供应电压 Supply Voltage	VDD	6.0	V
工作环境温度 Operating ambient temperature	Topr	-20°C～+85°C	
储存环境温度 Storage ambient temperature	Tstg	-40°C～+125°C	
焊接条件 Welding conditions	Tsol	波峰焊（Wave soldering）：260℃，≦6s 手动焊（manual welding ）：300℃，3s	

光电参数（Initial Electrical Optical Characteristics）（Ta=25℃）

项目参数 Parameter	符号 Symbol		最小值 Min.	一般值 Typ.	最大值 Max.	单位 Unit	测试条件 Test conditions
接收距离 receive distance	L	0°	10	18	-	M	/
	L	左35°	5	6	-	M	
	L	右35°	5	6	-	M	
载波频率 Carrier Frequency	f_o		-	38	-	KHZ	/
BPF宽度 BPF width	f_{BW}		-	6	-	KHZ	/
低电平输出 Low level output	Vol		0.2	-	0.4	V	Isink=2.0mA
高电平输出 High level output	Voh		4.7	-	5.0	V	VCC=5V
输出脉冲宽度 Pulse width	T_{pwl}		400	600	800	us	burst wave Vin=500UVp-p
	T_{PWH}		400	640	800	us	burst wave Vin=50mVp-p

推荐使用条件（Recommended usage conditions）：

项目参数 Parameter	符号 Symbol	最小值 Min.	一般值 Typ	最大值 Max.	单位 Unit
供应电压 Supply Voltage	VDD	2.7	-	5.5	V
输入频率 input frequency	FM	-	37.9	-	KHZ
工作温度 Operating temperature	Topr		25		°C

应用电路图（Application circuit diagram）：

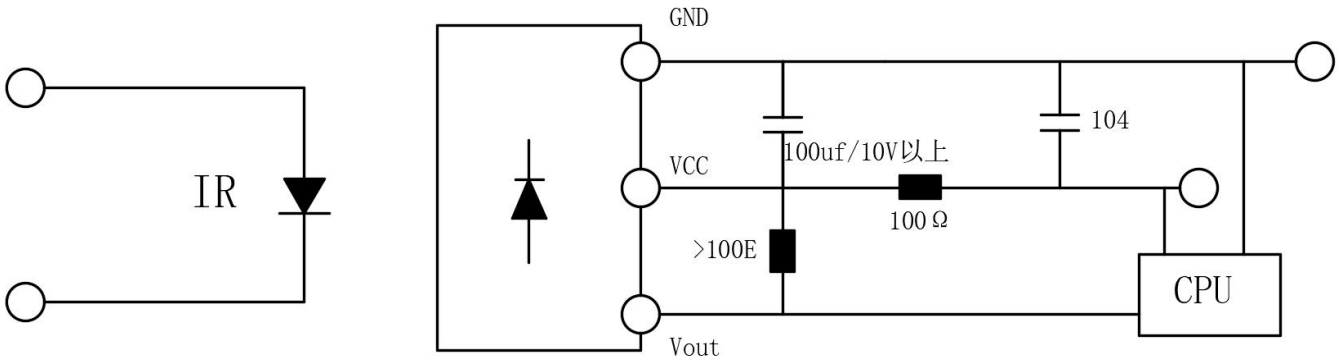

原理图（schematic diagram）：

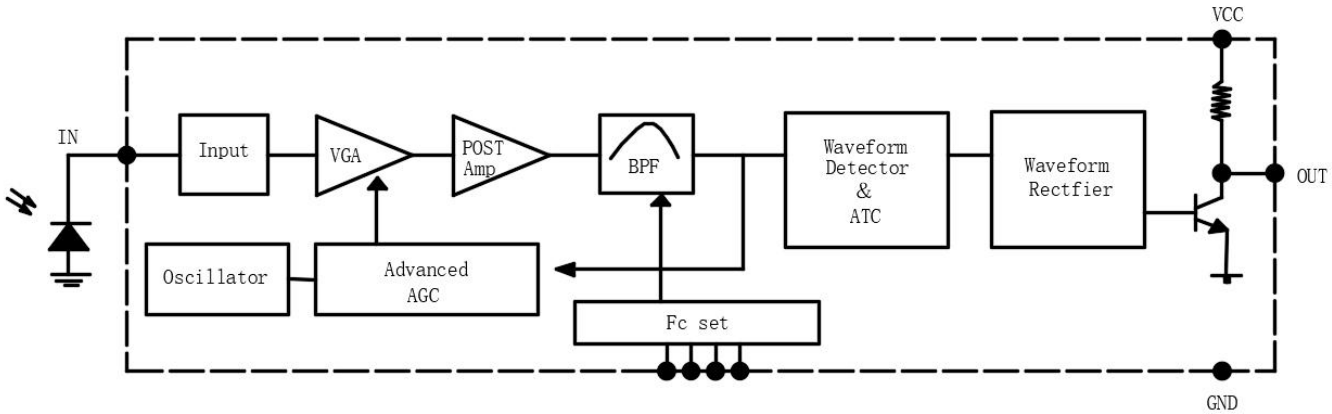

接收角度测试方式（Receiving angle testing method ）：

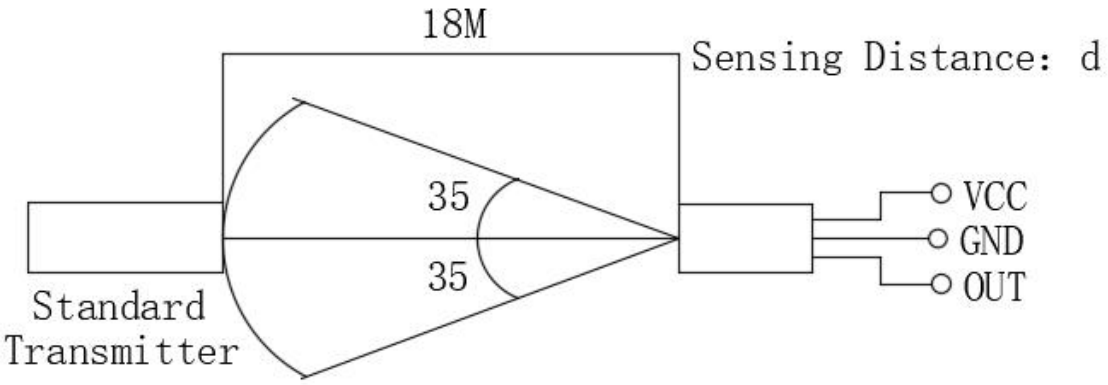

测试波形（Test waveform）：

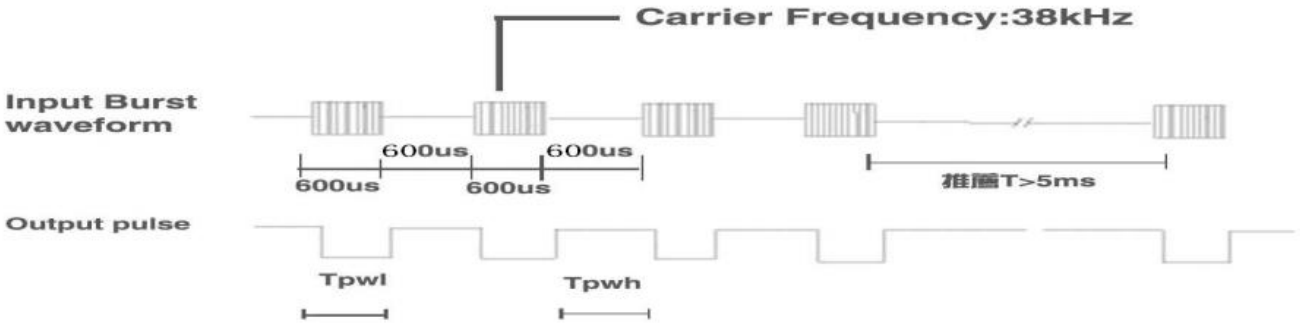

接收距离分档:
Receive distance grading:

代码 Code	最小值 Min	最大值 Max	单位 Unit	测试条件 Test conditions
L1	6	8	M	ICC=0.5mA
L2	10	15		
L3	15	20		

可靠性试验

Reliability Test Items And Conditions

*可靠性实验项目（Reliability Test Project）

测试项目	测试条件	测试时间	测试数量	合格数
焊接耐热温度	温度260℃±5℃（非受力状态下）	5秒以内	20	20
静电破坏实验	电容100PF，电阻1.5KΩ， 静电电压4KV,各引脚	-	20	20
振动实验	频率：10-50HZ/1min 振幅：1.5mm X、Y、Z/30min	30分钟	20	20
高温储存	温度85℃±2℃	240小时	20	20
低温储存	温度-20℃±2℃	240小时	20	20
高温高湿储存	温度85℃；湿度85%	240小时	20	20
高低温循环	低温-20℃（30秒） 高温+85℃（30秒）	10个循环	20	20
引脚弯曲	用2.5N的外力对每个引脚弯曲2次	-	20	20

外形尺寸

Outline Dimension

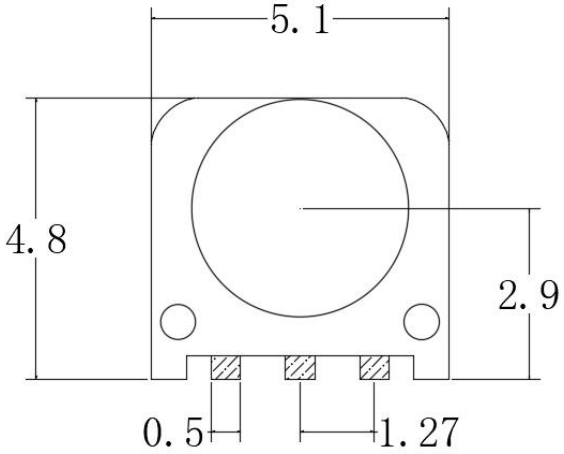

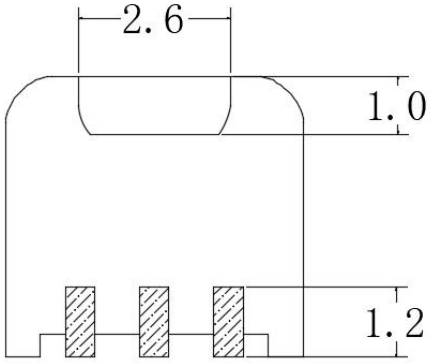

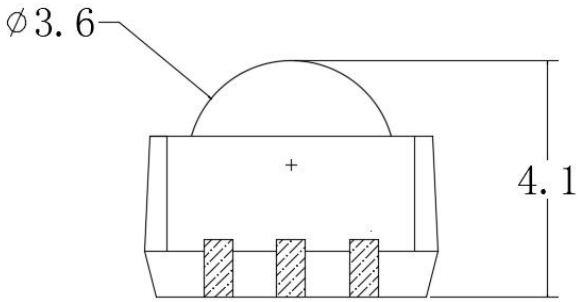

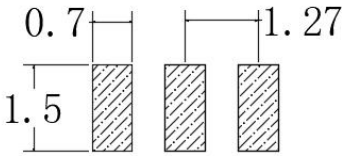

建议焊盘尺寸
Recommended Soldering Pattern

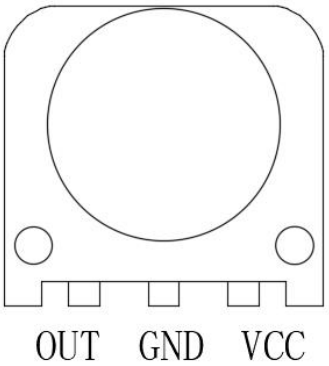

备注(Note)：

1. 标注尺寸单位为毫米

Dimensions are in millimeters.

2. 除特别标注外，所有尺寸允许公差± 0.3㎜ .

Tolerances unless mentioned are ± 0.3mm.

包装(1)

Packaging(1)

载带与圆盘尺寸 Belt and disk dimensions

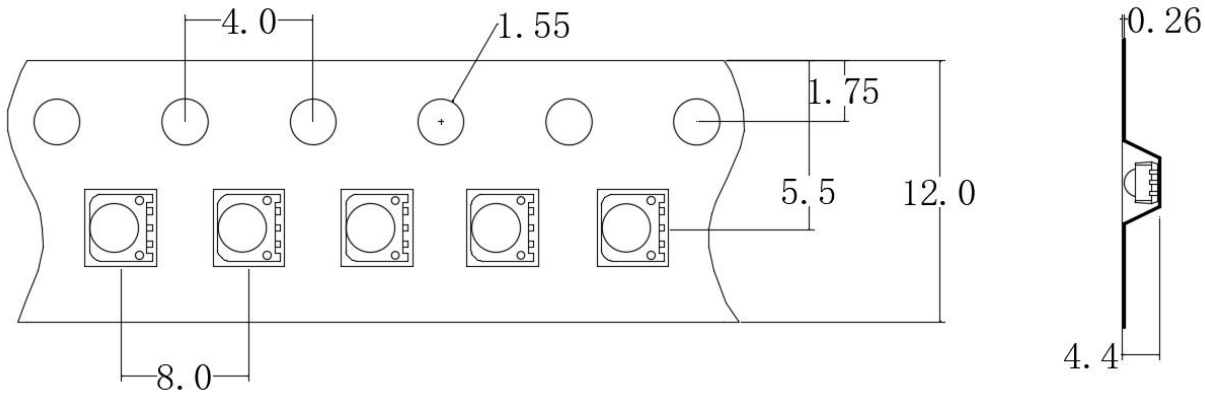

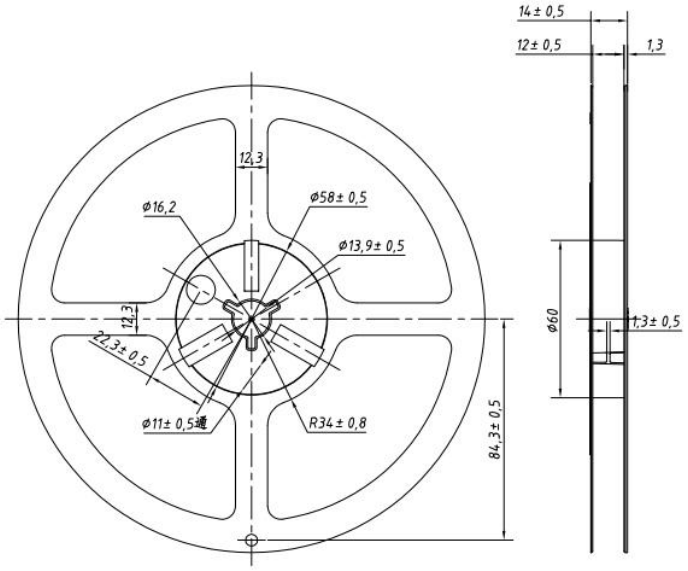

注:

1. 尺寸单位为毫米(mm)。
1. Size unit is mm (mm).
2. 尺寸公差是±0.1mm。
2. The dimensional tolerance is ± 0.1mm.

圆盘及载带卷出方向及空穴规格 Disk and carrier belt direction of roll and hole dimensions

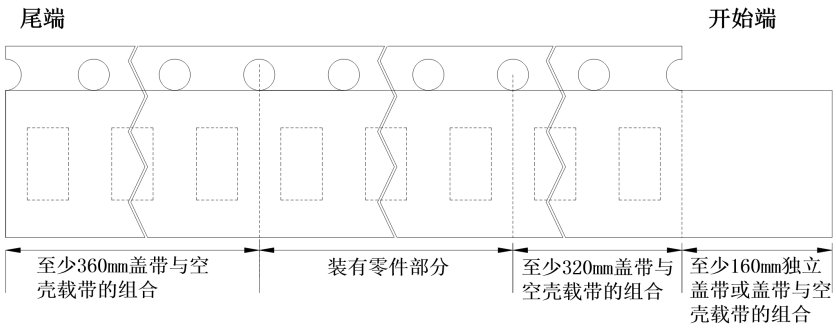

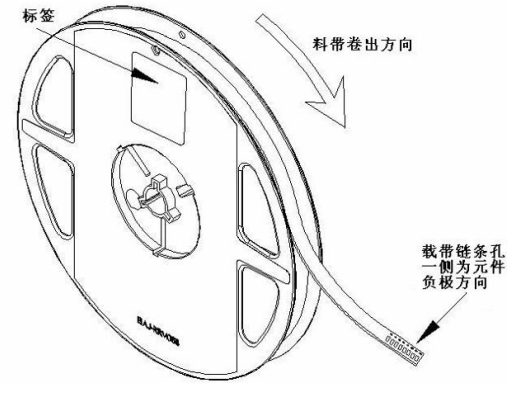

包装（2）

Packaging (2)

◇ 防潮抗静电包装Moisture Proof and Antti-Electrostic Foil Bag

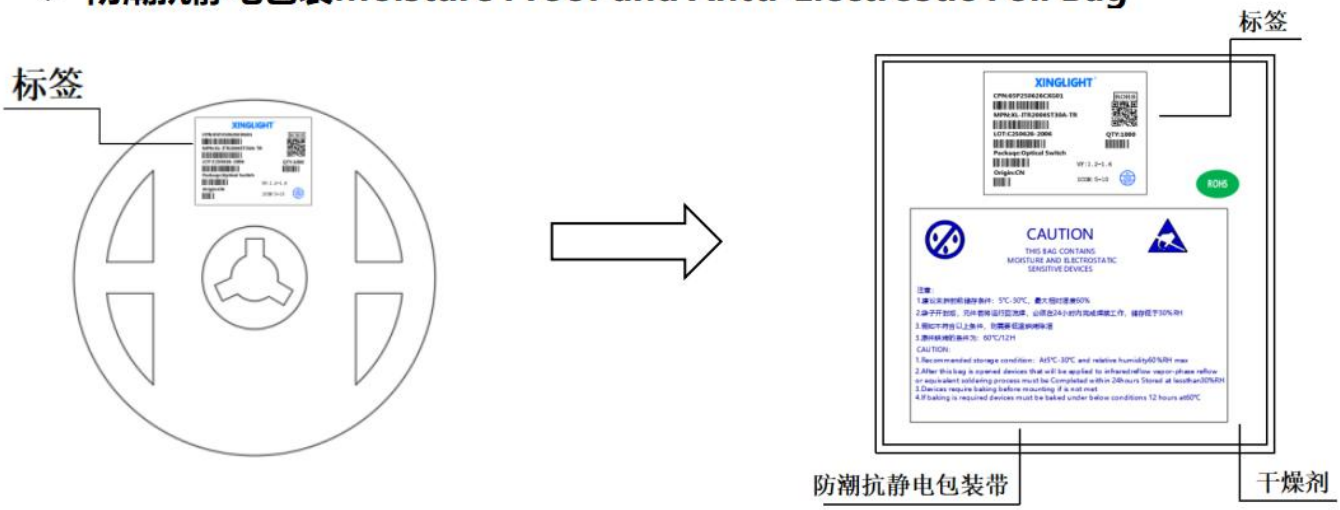

◇ 外包装箱 Cardboard Box

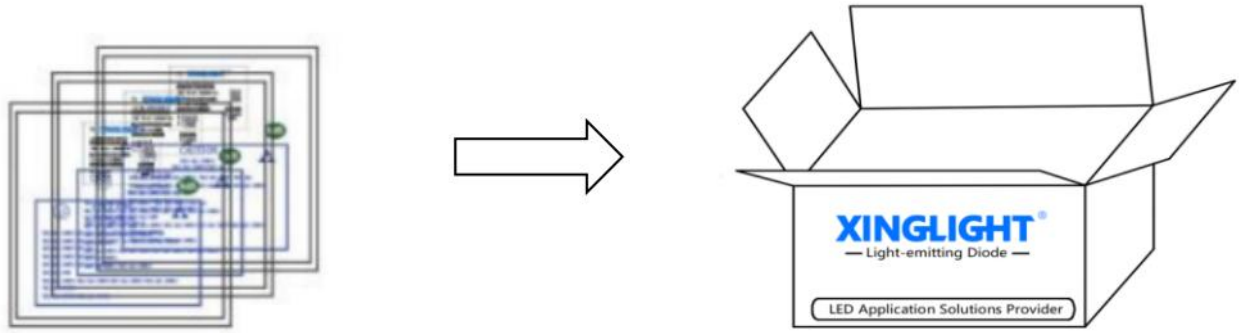

◇ 标签说明 Label Expantion

CPN：批号/档位　　LOT：日期

MPN：型号　　VF：电压

QTY：数量　　M：接收距离

ORIGIN：产地　　MA：电流

PACKAQE：封装



焊接指导（1）

Guideline for Soldering (1)

1. **使用烙铁人手焊接**

Hand Soldering

只建议在修理和重工的情况下使用手工焊接；推荐使用功率低于 30W 的烙铁，焊接时烙铁的温度必须保 持在300℃以下，且每个电极只能进行一次焊接，每次焊接的持续时间不得超过 3 秒。人手焊接过程中的不慎操作易引起 LED 产品的损坏，应当小心谨慎。

Manual welding is recommended only for repair and heavy industry situations. A soldering iron of less than 30W is recommended to be used in Hand Soldering. Please keep the temperature of the soldering iron under 300℃ while soldering. Each terminal of the LED is to go for less than 3 second and for one time only.

Be careful because the damage of the product is often started at the time of the hand soldering.

2. 回流焊接：推荐使用以下无铅回流焊接温度图进行。

Reflow Soldering: Use the conditions shown in the under Figure ofPb-Free Reflow Soldering.

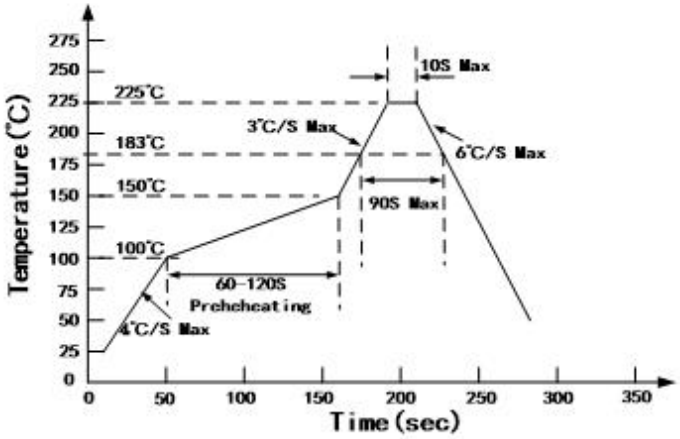

有铅制程 have lead process

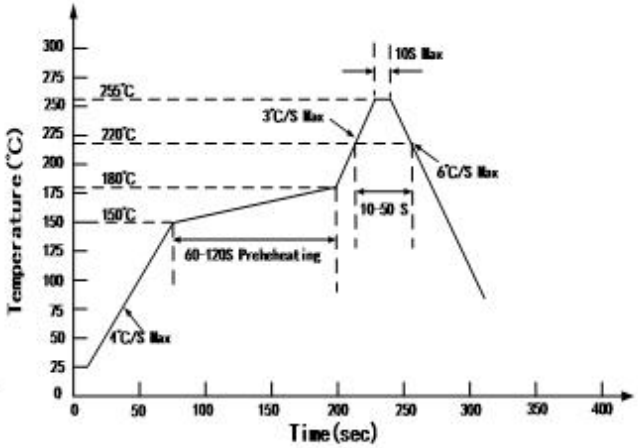

无铅制程 Lead-free process

- 回流焊接最多只能进行两次。

Reflow soldering should not be done more than two times.

- 在回流焊接升温过程中，请不要对 LED 施加任何压力。

Stress on the LEDs should be avoided during heating in soldering process.

- 在焊接完成后，待产品温度下降到室温之后，再进行其他处理。

After soldering, do not deal with the product before its temperature drop down to room temperature.

• 产品最佳的最高焊接温度建议控制在240℃/6S

The recommended maximum welding temperature for the product is 240 ℃/6s

焊接指导（2）

Guideline for Soldering (2)

3. 清洗：

Cleaning

在焊接后推荐使用酒精进行清洗，在温度不高于 30℃的条件下持续 3 分钟， 不高于 50℃的条件下持续 30 秒。使用其他类似溶剂清洗前，请先确认使用的溶剂不会对 LED 的封装和环氧树脂部分造成损伤。

超声波清洗也是有效的方法，一般最大功率不应超过 300W，否则可能对 LED 造成损伤。请根据具体的 情况预先测试清洗条件是否会对 LED 造成损伤。

It is recommended that alcohol be used as a solvent for cleaning after soldering. Cleaning is to go under 30℃ for 3 minutes or 50℃ for 30 seconds. When using other solvents, it should be confirmed beforehand whether the solvents will dissolve the package and the resin or not.

Ultrasonic cleaning is also an effective way for cleaning. But the influence of Ultrasonic cleaning on LED depends on factors such as ultrasonic power. Generally, the ultrasonic power should not be higher than 300W. Before cleaning, a pretest should be done to confirm whether any damage to LEDs will occur.

* **注意：** 此一般指导原则并不适用于所有 PCB 设计和焊接设备的配置。具体工艺受到诸多因素的影响， 请根据特定的PCB设计和焊接设备来确定焊接方案。

* **Note:** This general guideline may not apply to all PCB designs and configurations of all soldering equipment. The technics in practise is influenced by many factors, it should be specialized base on the PCB designs and configurations of the soldering equipment..

使用注意事项（1）

Precautions (1)

1. **贮存：**

Storage

- 本产品使用密封防潮抗静电袋包装，并附有干燥剂，未开封的产品有一年的保存时间。

Moisture proof and anti-electrostatic package with moisture absorbent material is used, to keep moisture to a minimum.

- 开封前，产品须存放在温度不高于 30℃，湿度不高于 60%RH 的环境中。

Before opening the package, the product should be kept at 30℃ or less and humidity less than 60% RH, and be used within a year.

- 开封后，产品须存放在温度不高于 30℃，湿度不高于 60%RH 的环境中，且应该在 168小时（7天） 内使 用完;且贴片后应尽快做焊接。建议工作环境为温度不高于 30℃，湿度不高于 40%RH。

After opening the package, the product should be stored at 30℃ or less and humidity less than 40%RH, and be soldered within 168 hours (7 day). And it should be welded as soon as possible after the patch.It is recommended that the product be operated at the workshop condition of 30℃ or less and humidity less than 40%RH.

- 对于尚未焊接的 LED，如果吸湿剂或包装失效，或者产品没有符合以上有效存储条件，烘焙可以起到一定的性能恢复效果。烘焙条件：60±5）℃，持续24 小时。

If the moisture absorbent material has fade away or the LEDs have exceeded the storage time, baking treatment should be performed based on the following condition: (60±5)℃ for 24 hours.

2. 静电：

Static Electricity

静电和电涌会导致产品特性发生改变，例如正向电压降低等，如果情况严重甚至会损毁产品。所以在使用时必须采取有效的防静电措施。所有相关的设备和机器都应该正确接地，同时必须采取其他防止静电和电涌的措施。使用防静电手环，防静电垫子，防静电工作服、工作鞋、手套，防静电容器，都是有效的防止静电和电涌的措施；严禁使用普通塑料制品。建议在作业过程中，使用离子风扇来压制静电的产生。距离LED元件1英尺距离的环境范围内静电场电压小于100V。

Static electricity or surge voltage damages the LEDs. Damaged LEDs will show some unusual characteristic such as the forward voltage becomes lower, or the LEDs do not light at the low current. even not light.
All devices, equipment and machinery must be properly grounded. At the same time, it is recommended that wrist bands or anti-electrostatic gloves, anti-electrostatic containers be used when dealing with the LEDs.Using ordinary plastic products are strictly prohibited.It is recommended to use ion fans to suppress the static electricity generation during the operation.The static field voltage is less than 100V within the ambient range of 1 foot distance from the LED element.

使用注意事项（3）

Precautions (3)

3. 其他事项：

Others

直接用手拿取产品不但会污染封装树脂表面，也可能由于静电等因素导致产品性能的改变。过度的压力也可能直接影响封装内部的管芯和金线，因此请勿对产品施加过度压力，特别当产品处于高温状态下，例如在回流焊接过程中。

When handling the product, touching the encapsulant with bare hands will not only contaminate its surface, but also affect on its optical characteristics. Excessive force to the encapsulant might result in catastrophic failure of the LEDs due to die breakage or wire deformation. For this reason, please do not put excessive stress on LEDs, especially when the LEDs are heated such as during Reflow Soldering.

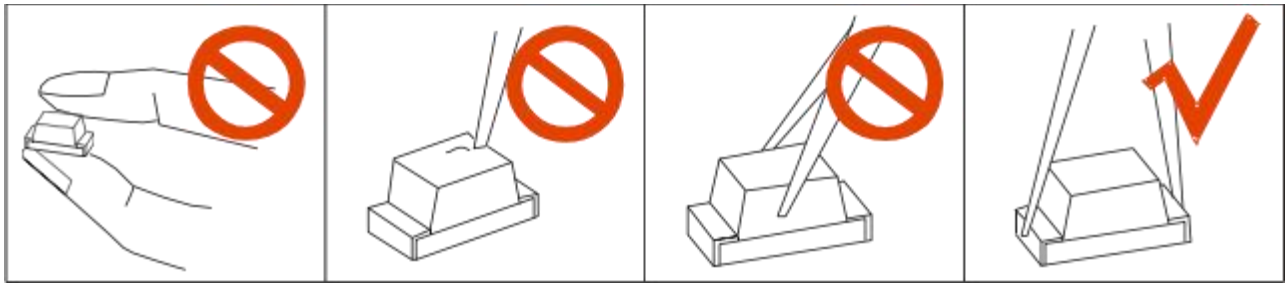

LED 的环氧树脂封装部分相当脆弱，请勿用坚硬、尖锐的物体刮、擦封装树脂部分。在用镊子夹取的时候也应当小心注意。The epoxy resin of encapsulant is fragile, so please avoid scratch or friction over the epoxy resin surface. While handling the product with tweezers, do not hold by the epoxy resin, be careful.

4. 眼睛保护忠告：

Safety Advice For Human Eyes

LED 发光时，请勿直视发光光源，特别是对于一些光强较高的 LED，强光可能伤害你的眼睛。

Viewing direct to the light emitting center of the LEDs, especially those of great Luminous Intensity, will cause great hazard to human eyes. Please be careful.

规格书如有修改，不另行通知

If there are any modifications to the specification sheet, no further notice will be given