XL-PLT5 520B-35mW　金属封装激光二极管　　技术数据表 Technical Data Sheet

模型图仅供参考

产品特征Product features

* 光输出功率（连续波）：35mW（TC = 25°C）
Optical output power (continuous wave): 35mW (TC = 25°C)
* 典型发射波长：518nm
Typical emission wavelength: 518nm
* 金属TO-56封装
Metal TO-56 Package
* 适用于连续波和脉冲模式的高效辐射源
Efficient radiation source for cw and pulsed operation
* 单模半导体激光器
Single mode semiconductor laser
* 高调制带宽
High modulation bandwidth
* 湿气敏感性等级（MSL）:2级
Moisture sensitivity level（MSL）: 2levels
* 环保产品，符合ROHS要求
Environmental protection products meet ROHS requirements

应用领域 Applications

* 激光雷达（LiDAR/Tof）与测距
Lidar (LiDAR/Tof) and Range Measurement
* 工业检测与安全传感
Industrial Detection and Safety Sensing
* 医疗与生物光子学
Medical and Biophotonics
* 军事与国防
Military and National Defense
* 科研与量子技术
Research and Quantum Technology
* 消费电子与安防
Consumer Electronics and Security Systems

XINGLIGHT All Rights Reserved. Spec No: V1.0 - Z　Date: 08/20/2026

目录

Catalogue

特性参数
natural parameter 3

外形尺寸
Outline Dimensions 5

包装
Packaging.....6

使用注意事项
Precautions.....7

特性参数

natural parameter

极限参数（**Absolute Maximum Ratings**）（**Ta=25**℃）

参数 parameter	符号 symbol	数值 Value	单位 unit
功率 power	Po	35	mW
反向电压 backward voltage	VR	2	V
工作温度 working temperature	Topr	-20 ∽ +85	℃
存储温度 Storage Temperature	Tstg	-40 ∽ +85	℃
焊接条件 Welding conditions	Tsol	波峰焊（reflow soldering）：240°C，≦ 6s 手动焊（manual welding ）：300°C，3s	

推荐操作条件 **Recommended Operating Conditions**

参数 parameter	符号 symbol	数值 Value	单位 unit
阀值电流 Threshold Current	Ith	≥26	mA
工作电流 Working Current	Iop	≤80	mA
工作电压 working voltage	Vop	≤7.0	V

XINGLIGHT All Rights Reserved. Spec No: V1.0 - Z Date: 08/20/2026

光电参数（Optoelectronic Parameters）（Ta=25°C）

参数 parameter	符号 symbol	测试条件 Test conditions	最小 min	典型 typ	最大 max	单位 unit
阀值电流 Threshold Current	Ith	-	-	25	50	mA
工作电流 Working Current	Iop	Po=30mW	-	75	105	mA
工作电压 working voltage	Vop	Po=30mW	-	6.2	7.0	V
中心波长 Central wavelength	λ	Po=30mW	510	518	530	nm
光束发散角 beam divergence angle	θ⊥	Po=30mW	19	22	25	°
光束指向性 Beam Directionality	θ∥	Po=30mW	5	7.5	10	°
错位光束角度 Misaligned beam angle	Δ θ⊥	Po=30mW	-5	-	+5	°
	Δ θ∥	Po=30mW	-5	-	+5	°
差分效应 differential efficiency	η d	Po=30mW	0.45	0.75	-	W/A

备注：remarks ：

[1] θ⊥和θ∥定义为 50%峰值处快轴、慢轴角度。

θ⊥ and θ∥ are defined as the angles of the fast axis and slow axis at the 50% peak value.

[2] 数据测试温度为25°，环境温度过高工作温度,器件的寿命将会受到影响

[The data test was conducted at 25° C; operating at ambient temperatures higher than this will affect the device's lifespan.

XINGLIGHT All Rights Reserved. Spec No: V1.0 - Z Date: 08/20/2026

外形尺寸

Outline Dimension

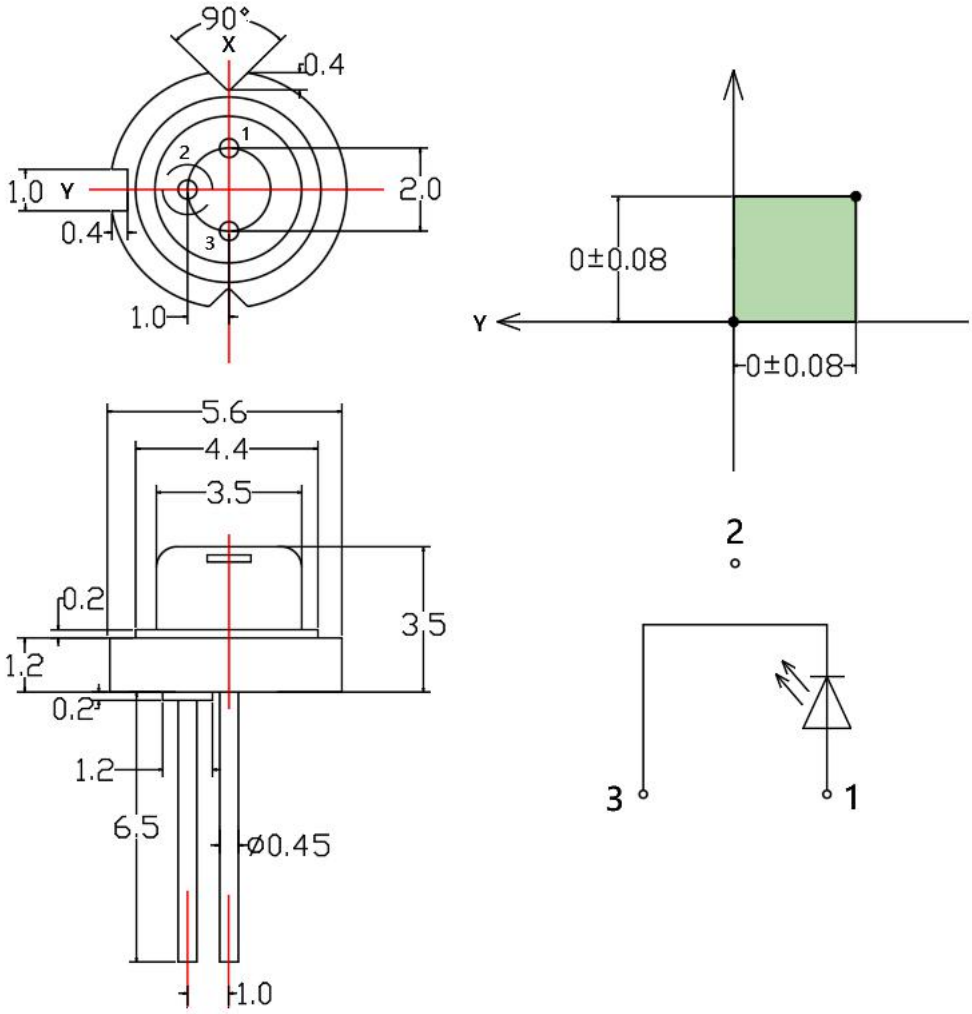

备注(Note)：

1. 标注尺寸单位为毫米

Dimensions are in millimeters.

2. 除特别标注外，所有尺寸允许公差± 0.50㎜ .

Tolerances unless mentioned are ± 0.50mm.

包装

Packaging

*袋装

In Bags

*防潮抗静电包装

Moisture Proof and Anti-Electrostatic Foil Bag

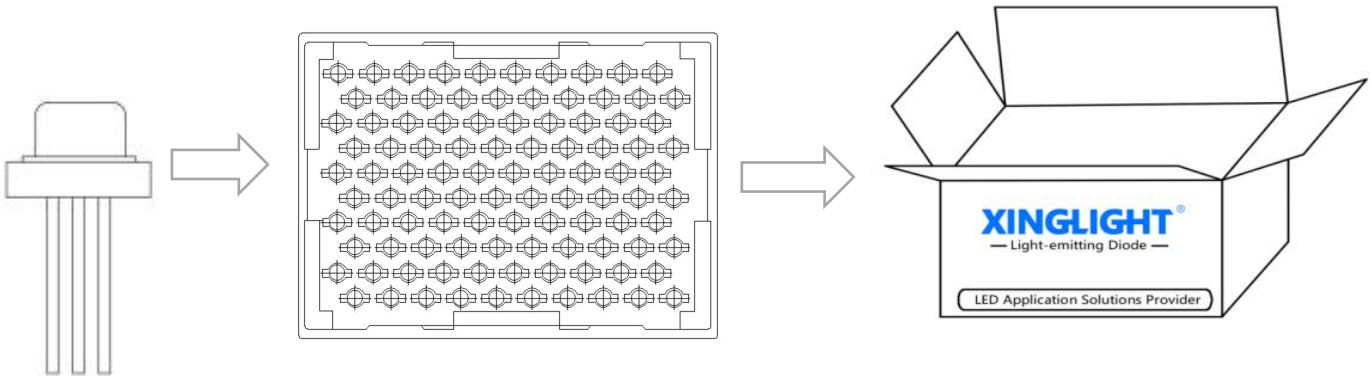

使用注意事项

Precautions

1.引脚配置 Feet assembly

（1）必需离胶体2毫米才能折弯支架。

It must be 2 mm from the colloid to bend the bracket.

（2）焊接必须在正常温度下进行，当激光二极管正常焊接到PCB板上后，应尽量避免在激光二极管的引脚处施加机械压力。

Welding must be performed at normal temperatures. Once the laser diode has been properly mounted onto the PCB, avoid applying mechanical pressure to its pins whenever possible.

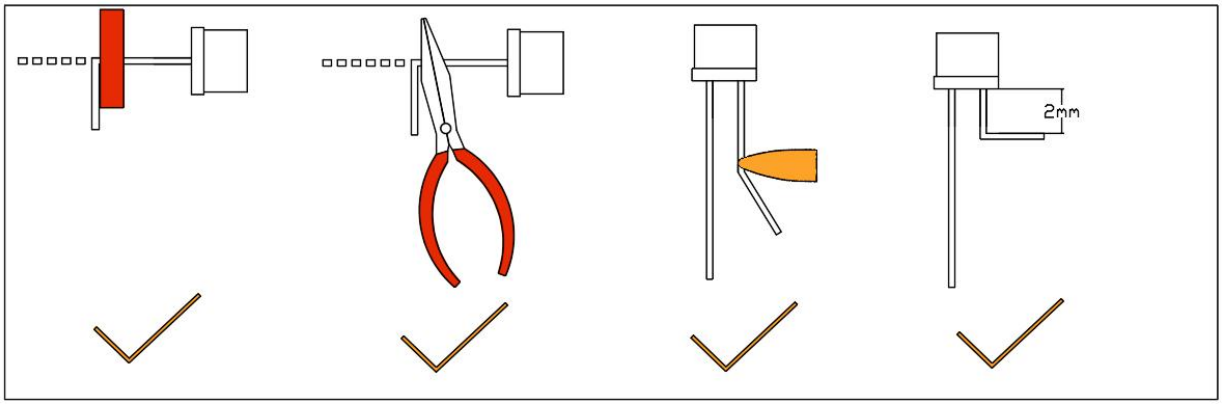

2.静电防护 Electrostatic protection

塑封激光二极管本身无固定“防护电压”值，其静电敏感度通常为HBM 人体模型 <800V，实际耐受往往仅250V-500V，需按<100V 操作标准实施防护 。

Plastic-coated laser diodes do not have a fixed "protection voltage" value; their electrostatic sensitivity typically ranges from <800 V on the HBM human model , with actual tolerance usually limited to 250–500 V. Protection measures must be implemented according to the <100 V operating standard.

3.眼睛皮肤保护忠告：

激光器工作时，避免激光照射眼睛和皮肤。

During laser operation, avoid exposure of the eyes and skin to laser radiation.

规格书如有修改，不另行通知

If there are any modifications to the specification sheet, no further notice will be given.